Model Engineering

Edward A. Lee
Professor
UC Berkeley

Chess Seminar

October 21, 2008
Berkeley, CA

Collaborators:

- Christopher Brooks (Berkeley)
- Chih-Hong Cheng (NTU, TU Munich)
- Trip Denton (Lockheed-Martin)
- Thomas Huining Feng (Berkeley)
- Edward Jones (Lockheed-Martin)
- Man-Kit Leung (Berkeley)
- Thomas Mandl (Bosch)
- Reinhard von Hanxleden (Christian-Albrechts-Univ. Kiel)

Abstract

Model-based design uses models of systems as the specification for software behavior and synthesizes executable software from those models. As with any successful engineering discipline, design techniques must evolve to support development, maintenance, and evolution of designs, and these techniques must be able to handle designs of realistic size and complexity. The discipline of software engineering provides techniques, such as object-oriented design, static analysis, and formal verification, for software designs. This talk explores techniques that support development, maintenance, and evolution of models. In particular, we discuss model transformation, model ontologies, and multimodeling, with applications to construction of large models (e.g. MapReduce), model optimization, and consistency management across multiple models.

The Ptolemy Project

Sponsors:

- Government
  - National Science Foundation
  - Army Research Office
  - Air Force Research Lab
  - Air Force Office of Scientific Research
  - State of California Micro Program
- Industry
  - Agilent
  - Bosch
  - HSBC
  - Lockheed-Martin
  - National Instruments
  - Toyota

History:

The Ptolemy project was started in 1990, though its mission and focus has evolved considerably. An open-source, extensible software framework (Ptolemy II) constitutes the experimental laboratory.

Staffing:

- 1 professor
- 9 graduate students
- 2 postdocs
- 3 staff
- several visitors

Our Premise: Components are Actors rather than Objects

The established: Object-oriented:

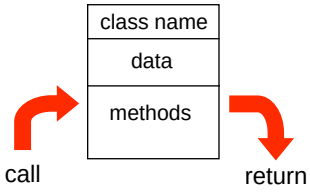

What flows through an object is sequential control

Things happen to objects

The alternative: Actor oriented:

Actors make things happen

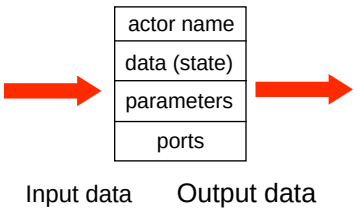

What flows through an object is evolving data

Ptolemy II: Our Open-Source Laboratory for Experiments with Actor-Oriented Design

http://ptolemy.org

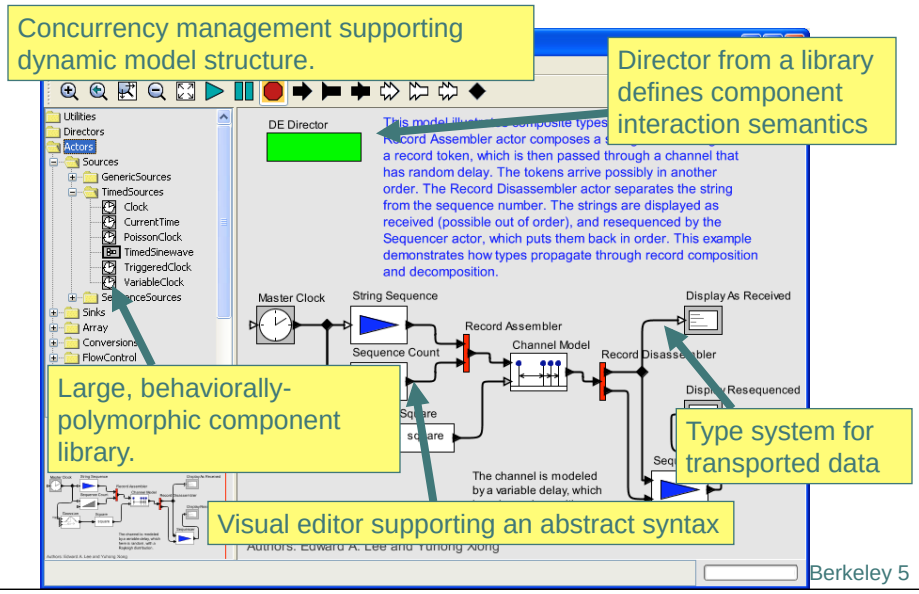

Berkeley 5

Approach: Concurrent Composition of Software Components, which are themselves designed with Conventional Languages (Java, C, C++ MATLAB, Python)

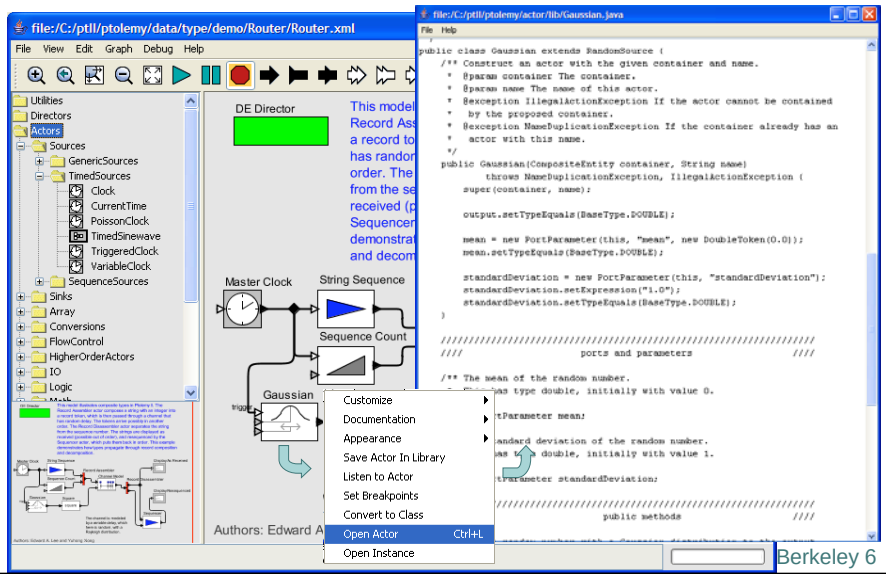

Berkeley 6

Outline

- Model transformation
  - with Thomas Feng
- Model ontologies
  - with Mankit Leung & Thomas Mandl (Bosch))
- Multimodeling
  - with Chihong Cheng (TU Munich), Trip Denton (Lockheed), Thomas Huining Feng, Edward Jones (Lockheed-Martin), Reinhard von Hanxleden (Christian-Albrechts-Univ. Kiel),

Model Transformation Inspirations and Influences

- AGG [Taentzer, 1999]
- AToM3 [Lara, Vangheluwe, 2002]
- FUJABA [Nickel, Niere, Zündorf, 2000],
- GReAT [Agrawal, Karsai, Shi, 2003]
- OMG MOF QVT (Query/Views/Transformations)
- PROGRES [Schürr, Winter, Zündorf, 1995]
- VIATRA2 [Balogh, Varró, 2006]

Key Prior Work from the Ptolemy Project: 1. Higher-Order Components

Examples of HoCs:

- Replicate a submodel over an array of inputs
- Structured dataflow components (case, iterate, recursion)
- Mobile models
- Parameterizing models with models
- Lifecycle models

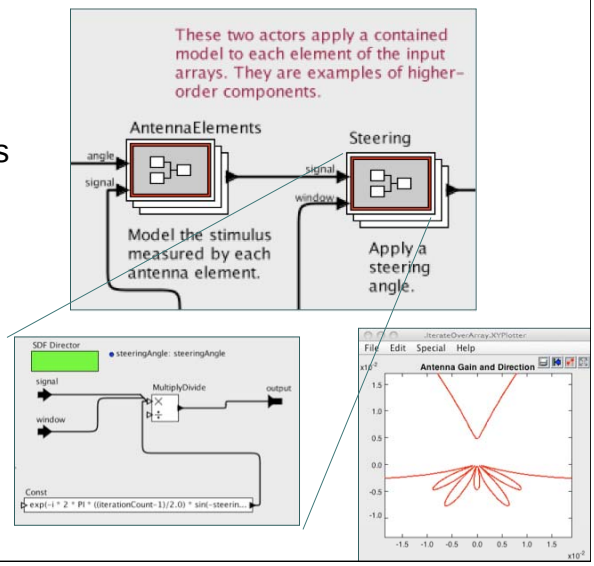

Key Prior Work from the Ptolemy Project: 2. Composition Languages

Big Systems with Small Descriptions

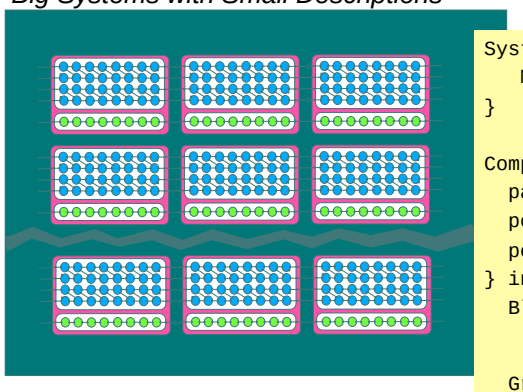

```
System is {
   Matrix(Component(2),20,3);
}

Component is {
  param n;
  port in[n*2+1];
  port out[n*2+2];
} in {
  Blue(n, in[1..n*2],
       out[1..n*2]);

  Green(n,  in[n*2+1],
        out[n*2+1]);
}
```

We have released a specification language that we call "Ptalon" for such systems, integrated into Ptolemy II [Cataldo 2006]

Demo: Pattern Matching and Graph Transformation

Model transformation workflow specifies iterative graph rewriting to transform the top-right model into the bottom-left model.

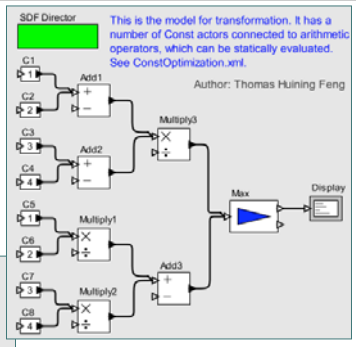

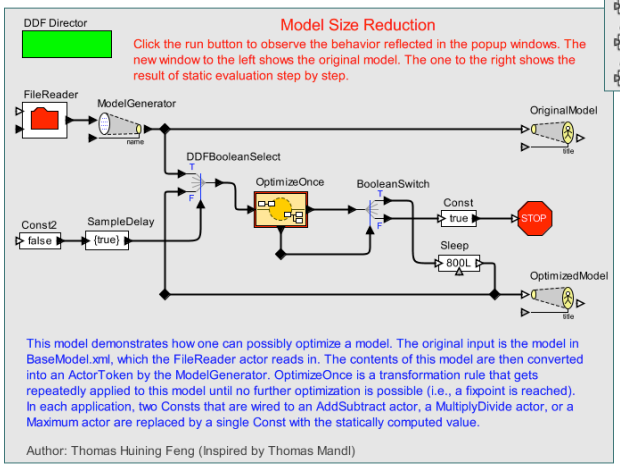

Executing the model at the left transforms the top model into the bottom model.

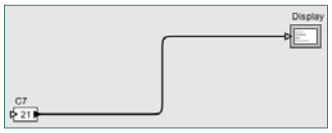

Applications

- *Model optimization* — *shown*
  - *Support programming idioms*
- *Scalable model construction* — *next*
  - *Adapt to problem size or parallelism*
- *Product families*
  - *A single model transforms to multiple products*
- *Design refactoring*
  - *Common model transformations*
- *Workflow automation*
  - *Configuration, composition, testing, versioning*

Scalable Model Construction: MapReduce Pattern [Dean, Ghemawat, 2004]

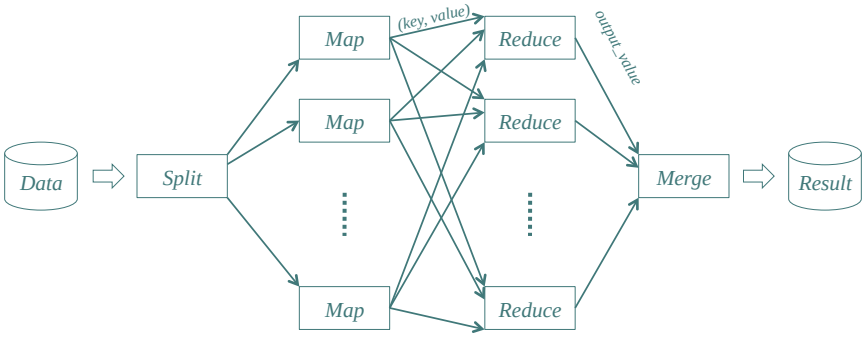

This pattern is intended to exploit parallel computing by distributing computations that fit the structure. The canonical example constructs an index of words found in a set of documents.

A MapReduce Model in Ptolemy II

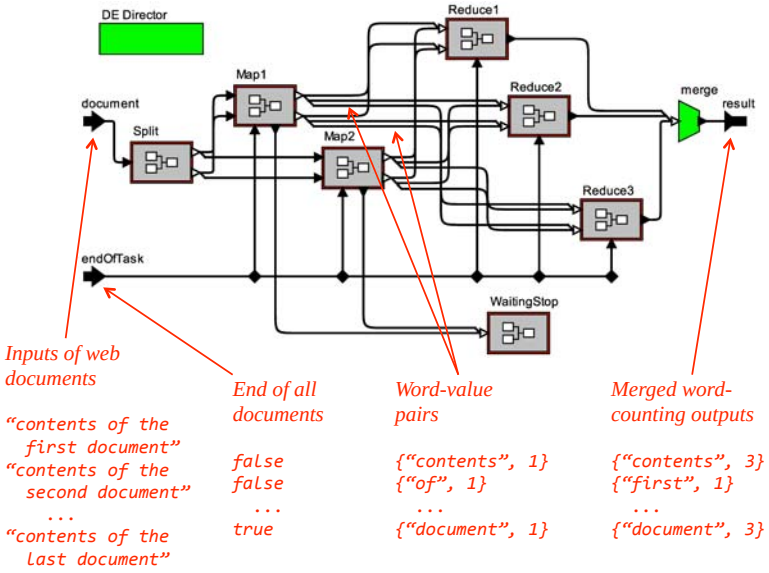

Complexity of the Model Structure

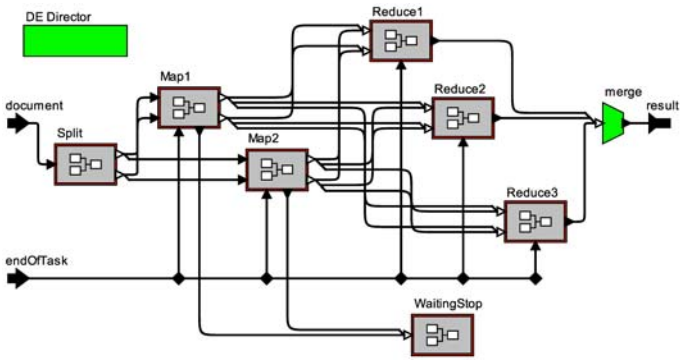

A configurable application with *m* Map actors and *n* Reduce actors has $O(m \times n)$ connections. Inside each actor, parameters need to be configured as well.

Observations

- The visual representation is only helpful for small models.
- The construction process by visual editing is tedious and error prone.
- Adapting the size of the model to varying numbers of compute resources by visual editing is unreasonable.
- Replacing the Map or Reduce actors with alternative functions by visual editing is also not reasonable.

Transformation Rule

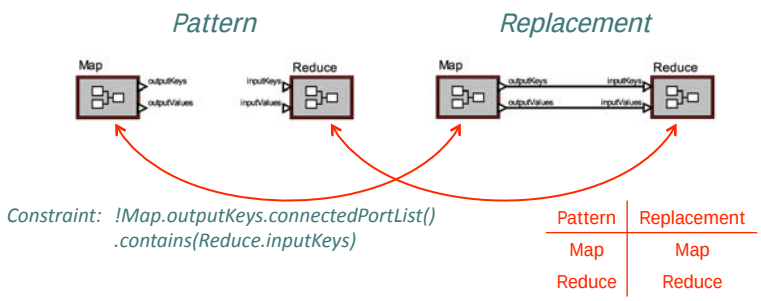

A transformation rule to connect a Map actor to a Reduce actor

Map and Reduce are matchers to match arbitrary actors with the specified ports.

A Set of Transformation Rules

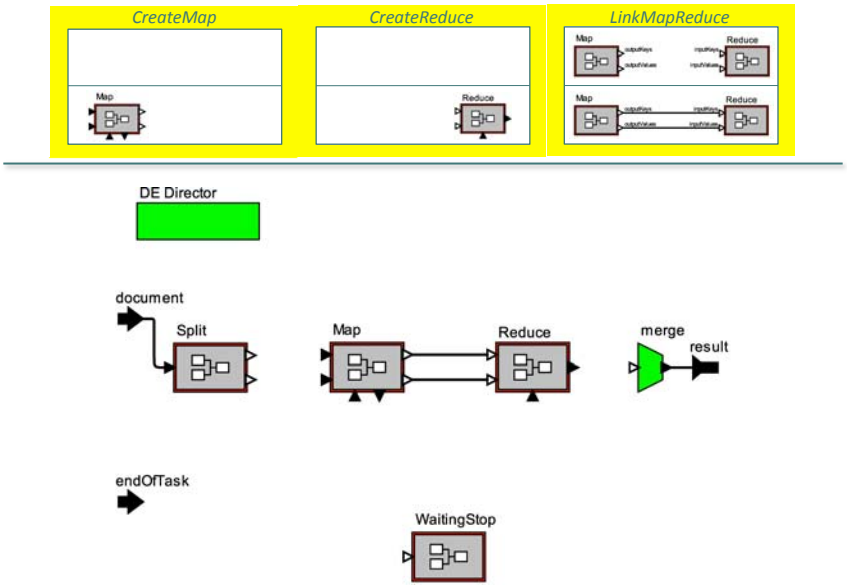

Model is built by repeatedly applying transformation rules drawn from a set

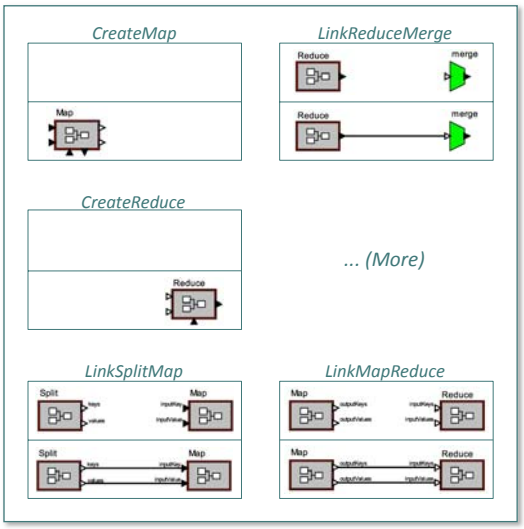

Workflow mechanisms:

- Priority (AGG, AToM3)
- Imperative programs (PROGRES)
- Story diagrams (FUJABA)
- Control flow and data flow (GReAT)
- Abstract State Machines (VIATRA2)
- Ptolemy II models (our approach)

The TransformationRule Actor

Encapsulates a transformation rule

Input:

modelInput – actor tokens that contain model fragments

Output:

modelOutput – actor tokens that contain transformation results

matched – whether the last transformation was successful

This actor may be used in nearly any Ptolemy model (dataflow, process networks, discrete-events, etc.)

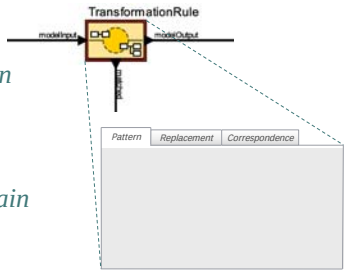

Actor provides a custom visual interface for specifying model transformations

Ptolemy II model defines a workflow

This Ptolemy II model creates and executes a MapReduce application for a parameterized number of machines.

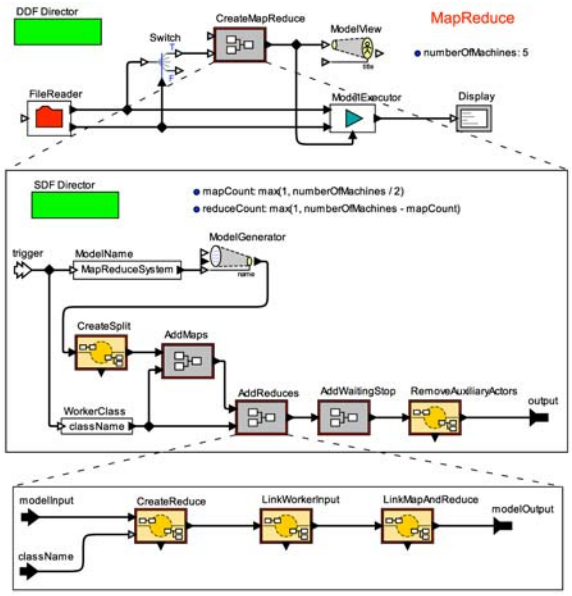

Using Other MoCs for Workflows

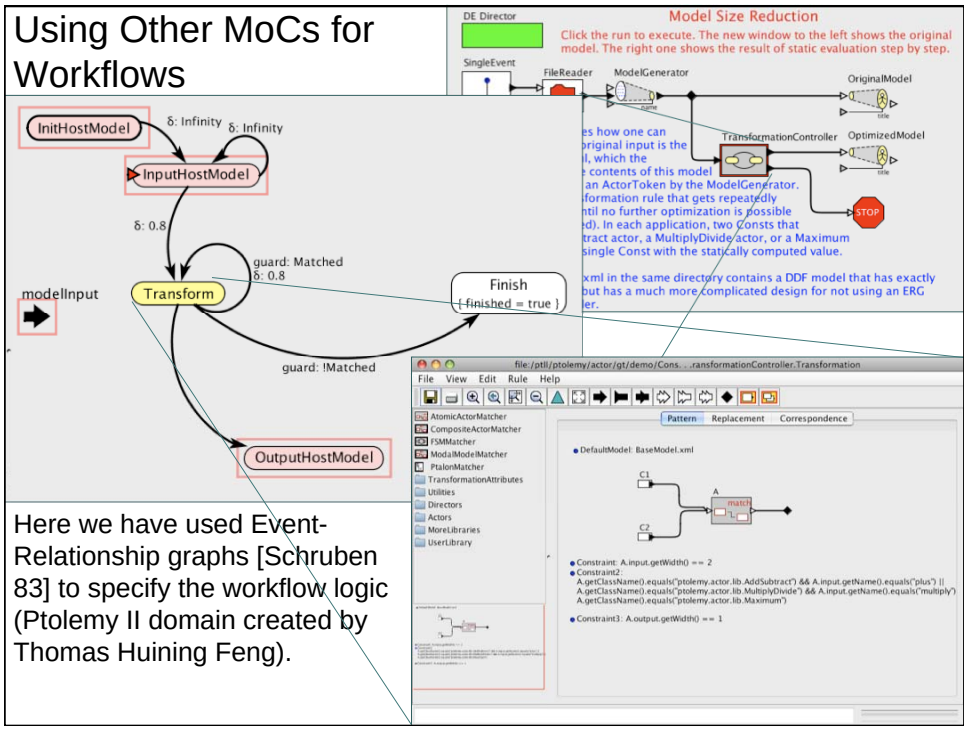

Here we have used Event-Relationship graphs [Schruben 83] to specify the workflow logic (Ptolemy II domain created by Thomas Huining Feng).

Model Transformation Summary

- Patterns, replacements, and workflows are all expressed using the same target modeling language(s) as the application.
- Mixing of modeling languages / models of computation (via the Ptolemy II framework) is supported in the application, patterns, replacements, and workflows.
- Visual syntaxes become more scalable and flexible.
- Applications
  - Model optimization
  - Scalable model construction
  - Product families
  - Design refactoring
  - Workflow automation
  - …

Outline

- Model transformation
  with Thomas Feng
- Model ontologies
  - with Mankit Leung & Thomas Mandl (Bosch))
- Multimodeling
  - with Thomas Feng, Trip Denton (Lockheed), Reinhard von Hanxleden (Christian-Albrechts-Univ. Kiel), Chihong Cheng (TU Munich))

Type Lattices

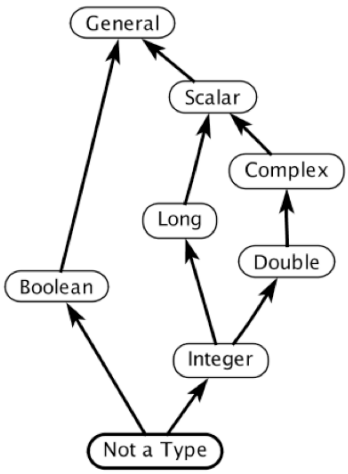

- A *lattice* is a partially ordered set (poset) where every subset has a least upper bound (LUB) and a greatest lower bound (GLB).
- Modern type systems (including the Ptolemy II type system, created by Yuhong Xiong) are based on efficient algorithms for solving inequality constraints on lattices.

Data Ontologies

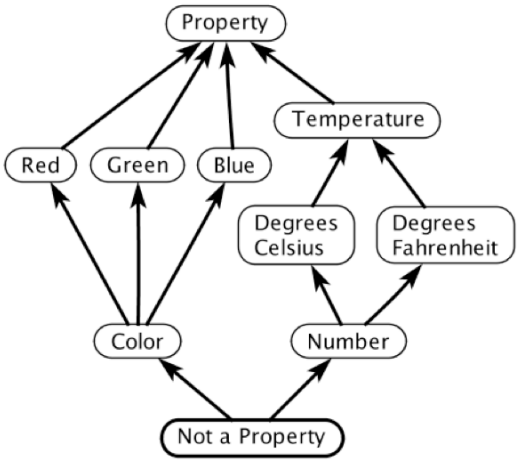

- Components in a model (e.g. parameters, ports) can have properties drawn from a lattice.
- Components in a model (e.g. actors) can impose constraints on property relationships.
- The type system infrastructure can infer properties and detect errors.

A Simple Example: Constant / Nonconstant

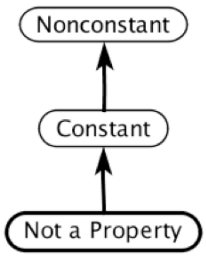

- A port is nonconstant (time-varying), constant, or unknown
- By default, actors impose the constraint that all output ports are greater than or equal to each input port (in the lattice)
- Actor "helpers" can override the constraint definition for any actor.

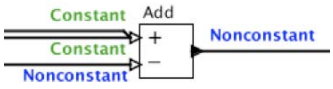

The software architecture leverages the helper mechanism created by Gang Zhou and Mankit (Jackie) Leung, originally for code generation. It is extensible to arbitrary lattices.

Property Inference in Action

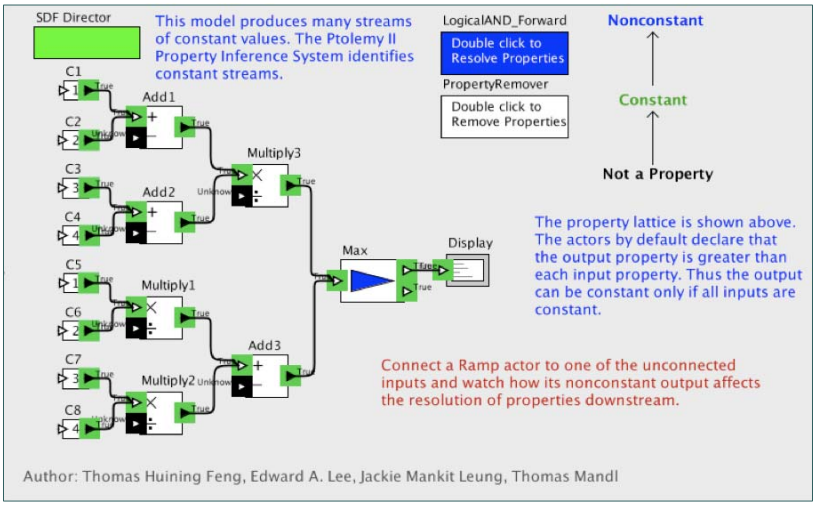

In the system above, the green indicates constant data and is inferred from constraints imposed by the actors.

Thanks to Thomas Mandl, Research & Technology Center, Bosch, Palo Alto.

Property Inference in Action

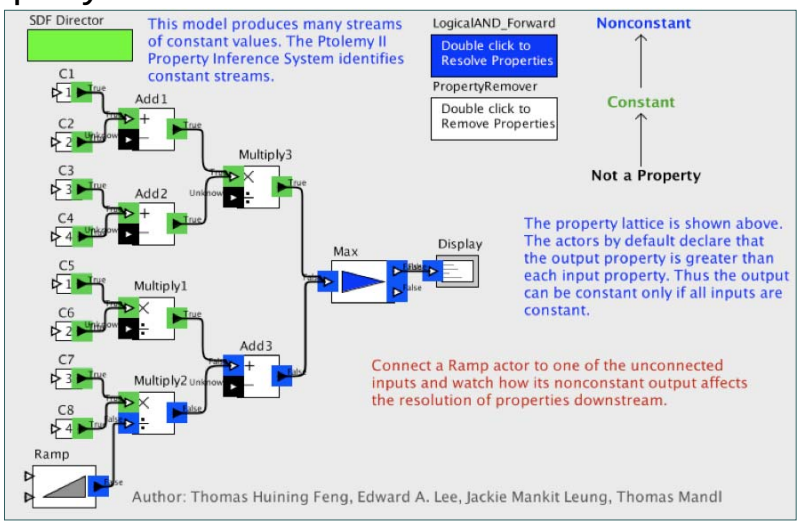

In the system above, one of the constant sources has been replaced with a non-constant source. This affects the inferred properties downstream.

BOSCH

Thanks to Thomas Mandl, Research & Technology Center, Bosch, Palo Alto.

Outline

- Model transformation
  with Thomas Feng
- Model ontologies
  with Mankit Leung & Thomas Mandl (Bosch))
- Multimodeling
  - with Thomas Feng, Trip Denton (Lockheed), Reinhard von Hanxleden (Christian-Albrechts-Univ. Kiel), Chihong Cheng (TU Munich))

Multimodeling

Simultaneous use of multiple modeling techniques.

- **hierarchical multimodeling:** hierarchical compositions of distinct modeling styles, combined to take advantage of the unique capabilities and expressiveness of each style.
- **multi-view modeling:** distinct and separate models of the same system are constructed to model different aspects of the system.
- **meta modeling:** use of models together with models of the modeling language.

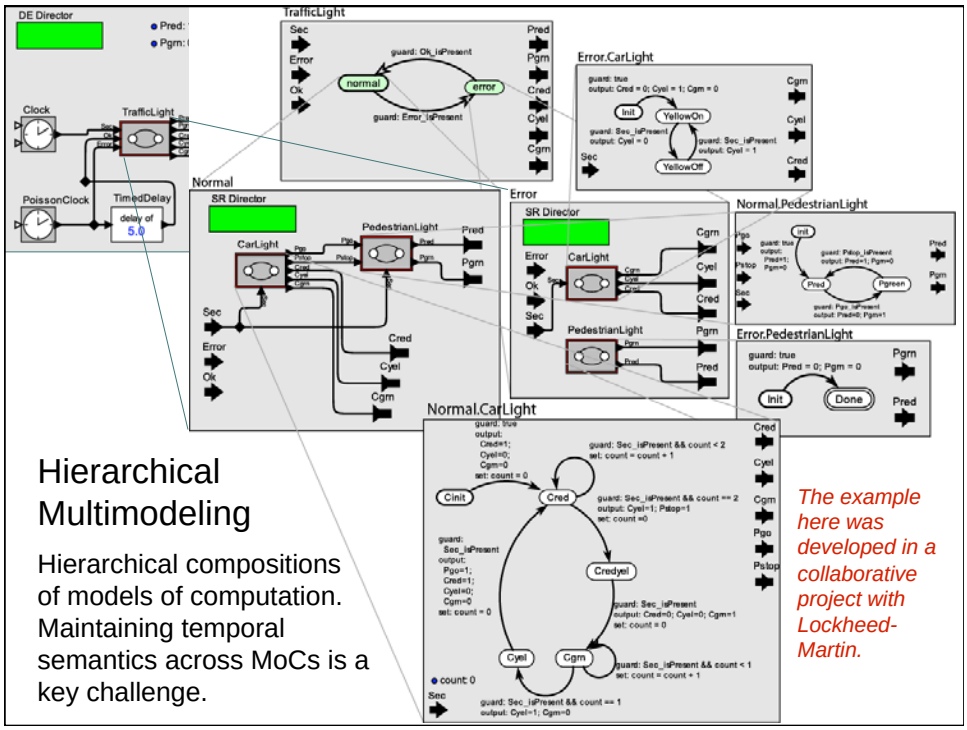

Hierarchical Multimodeling

Hierarchical compositions of models of computation. Maintaining temporal semantics across MoCs is a key challenge.

The example here was developed in a collaborative project with Lockheed-Martin.

Background on Hierarchical Multimodeling

- Statecharts [Harel 87]
- Ptolemy Classic [Buck, Ha, Lee, Messerschmitt 94]
- SyncCharts [André 96]
- *Charts [Girault, Lee, Lee 99]
- Colif [Cesario, Nicolescu, Guathier, Lyonnard, Jerraya 01]
- Metropolis [Goessler, Sangiovanni-Vincentelli 02]
- Ptolemy II [Eker, et. al. 03]
- Safe State Machine (SSM) [André 03]
- SCADE [Berry 03]
- ForSyDe [Jantsch, Sander 05]
- ModHelX [Hardebolle, Boulanger07]

Simple Traffic Light Example in Statecharts

Case study

- *Pred: pedestrian red signal*
- *Pgrn(0): turn pedestrian green off*
- *Cgrn: car green*
- *Sec: one second time*
- *2 Sec: two seconds time*
- *Pgo/Pstop: pedestrian go/stop*

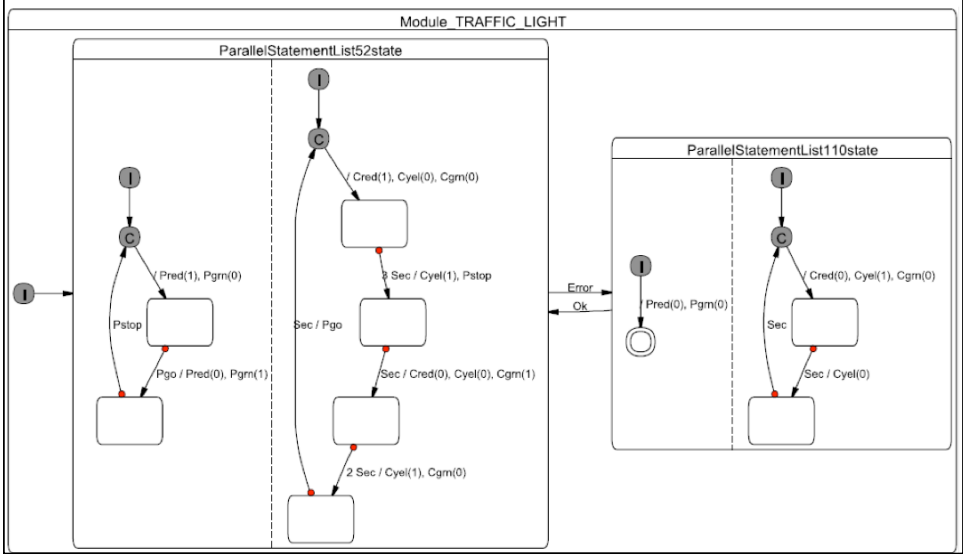

Traffic Light Example in Ptolemy II

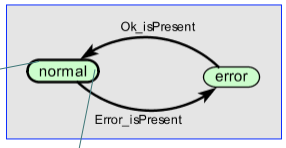

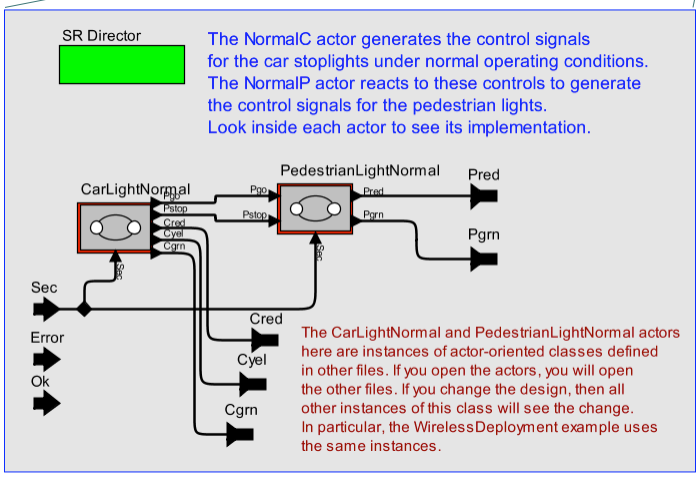

Whereas Statecharts lumps together the state machine semantics and the concurrency model, Ptolemy II separates these.

Here we have chosen the SR Director, which realizes a true synchronous fixed point semantics.

Concurrent State Machines in Ptolemy II

In Ptolemy II, we have implemented an SR Director (for synchronous concurrent models) and an FSM Director (for sequential decision logic). Rather than combining them into one language (like Statecharts), Ptolemy II supports hierarchical combinations of MoCs.

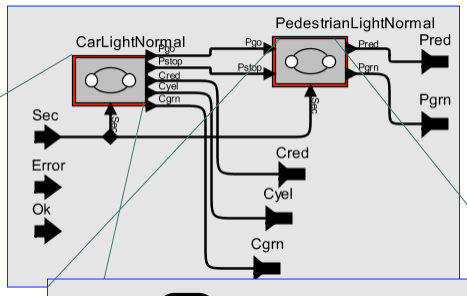

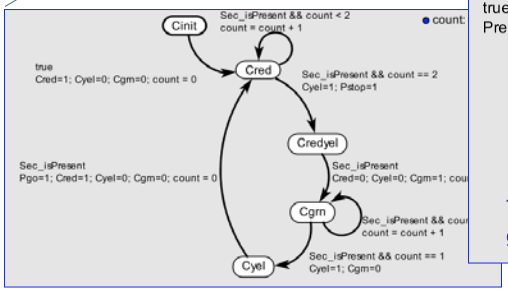

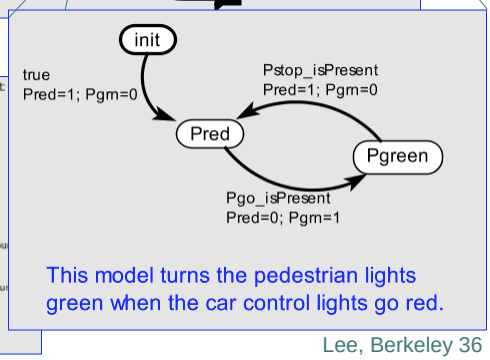

Stepping Outside Statecharts: Modeling the Environment

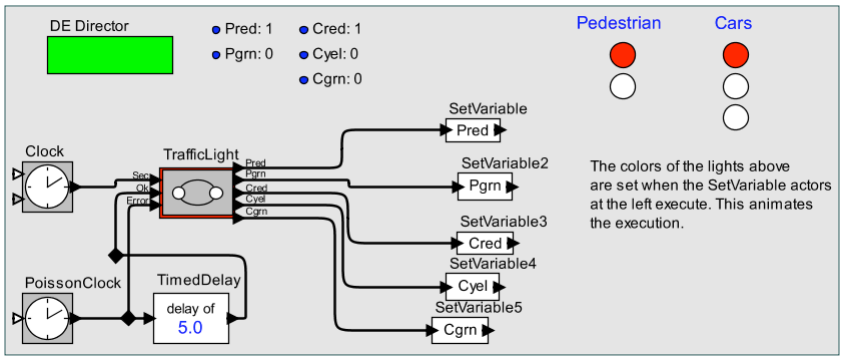

The above model places the TrafficLight model in a discrete-event testbench that clocks the light an injects faults according to a stochastic model.

What Makes This Possible: The Ptolemy II Actor Abstract Semantics

- Abstract Syntax
- Concrete Syntax
- Type System
- Abstract Semantics
- Concrete Semantics

How Does This Work?
Ptolemy II Actor Abstract Semantics

Actions invoked on an actor by a director:

- Preinitialization
- Initialization
- Execution
- Finalization

How Does This Work?
Ptolemy II Actor Abstract Semantics

Actions invoked on an actor by a director:

- Preinitialization
- Initialization
- Execution
- Finalization

E.g., Partial evaluation (esp. higher-order components), set up type constraints, etc. Anything that needs to be done prior to static analysis (type inference, scheduling, …)

How Does This Work?
Ptolemy II Actor Abstract Semantics

Actions invoked on an actor by a director:

- Preinitialization
- Initialization
- Execution
- Finalization

E.g., Initialize actors, produce initial outputs, etc.

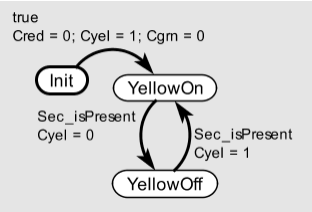

E.g., set the initial state of a state machine. Initialization may be repeated during the run (e.g. if the reset parameter of a transition is set and the destination state has a refinement).

How Does This Work?
Ptolemy II Actor Abstract Semantics

Actions invoked on an actor by a director:

- Preinitialization
- Initialization
- Execution
- Finalization

Iterate

```
If (prefire()) {
    fire();
    postfire();
}
```

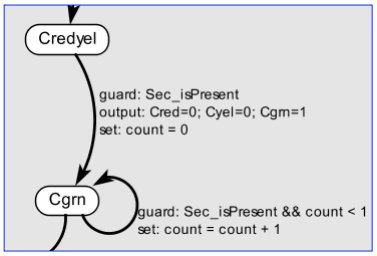

In fire(), an FSM first fires the refinement of the current state (if any), then evaluates guards, then produces outputs specified on an enabled transition. In postfire(), it postfires the current refinement (if any), executes set actions on an enabled transition, and takes the transition.

How Does This Work?
Ptolemy II Actor Abstract Semantics

Actions invoked on an actor by a director:

- Preinitialization
- Initialization
- Execution
- Finalization

A Consequence of Our Abstract Semantics: Behavioral Polymorphism

- Data polymorphism:
  - Add numbers (int, float, double, Complex)
  - Add strings (concatenation)
  - Add composite types (arrays, records, matrices)
  - Add user-defined types
- Behavioral polymorphism:
  - In dataflow, add when all connected inputs have data
  - In a synchronous/reactive model, add when the clock ticks
  - In discrete-event, add when any connected input has data, and add in zero time
  - In process networks, execute an infinite loop in a thread that blocks when reading empty inputs
  - In rendezvous, execute an infinite loop that performs rendezvous on input or output
  - In push/pull, ports are push or pull (declared or inferred) and behave accordingly

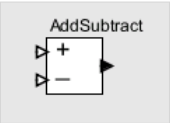

By not choosing among these when defining the component, we get a huge increment in component re-usability. Abstract semantics ensures that the component will work in all these circumstances.

Hierarchical Models are Behaviorally Polymorphic

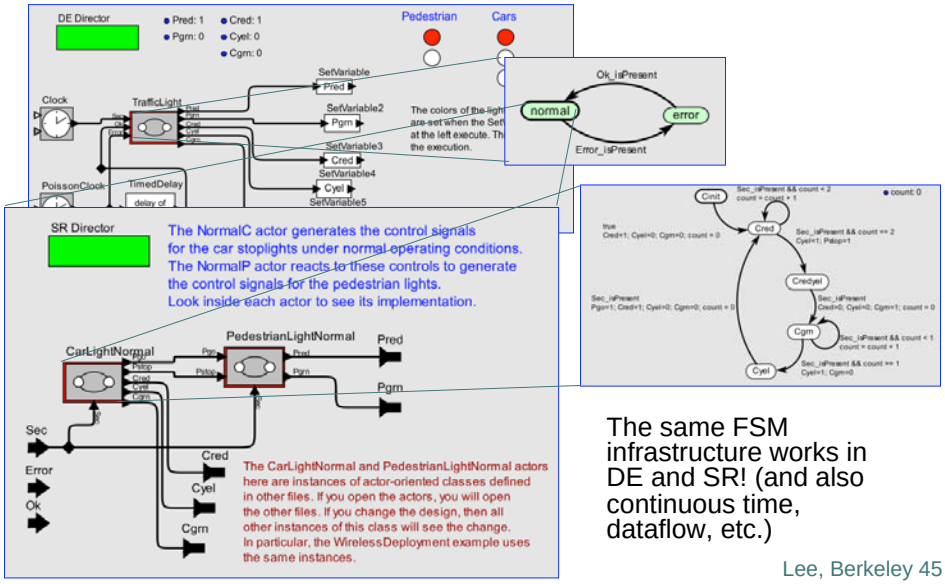

The same FSM infrastructure works in DE and SR! (and also continuous time, dataflow, etc.)

Multimodeling

Simultaneous use of multiple modeling techniques.

- **hierarchical multimodeling:** hierarchical compositions of distinct modeling styles, combined to take advantage of the unique capabilities and expressiveness of each style.
- **multi-view modeling:** distinct and separate models of the same system are constructed to model different aspects of the system.
- **meta modeling:** use of models together with models of the modeling language.

Multi-View Modeling:

Distinct and separate models of the same system are constructed to model different aspects of the system.

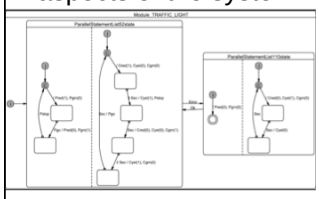

Functional model in Statecharts

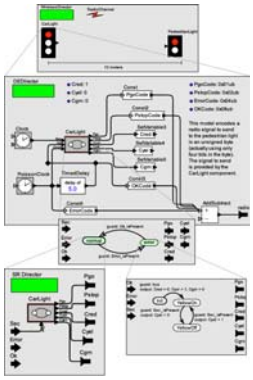

Deployment model in Ptolemy II

Verification model in SMV

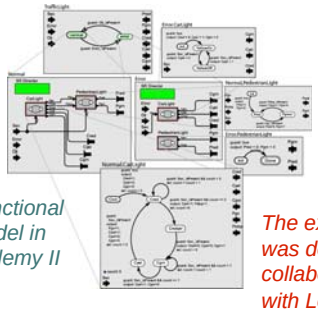

Functional model in Ptolemy II

The example here was developed in a collaborative project with Lockheed-Martin.

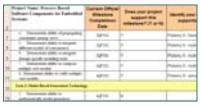

Reliability model in Excel

Lee, Berkeley 47

Background on Multi-View Modeling

- Ptolemy Classic [Buck, Ha, Lee, Messerschmitt 94]
- UML [Various, 90s]
- Model-integrated computing [Sztipanovits, Karsai, Franke 96]
- Colif [Cesario, Nicolescu, Guathier, Lyonnard, Jerraya 01]
- Metropolis [Goessler, Sangiovanni-Vincentelli 02]
- KIEL [Prochnow, von Hanxleden 07]

Lee, Berkeley 48

Model synthesis is one way to maintain model consistency

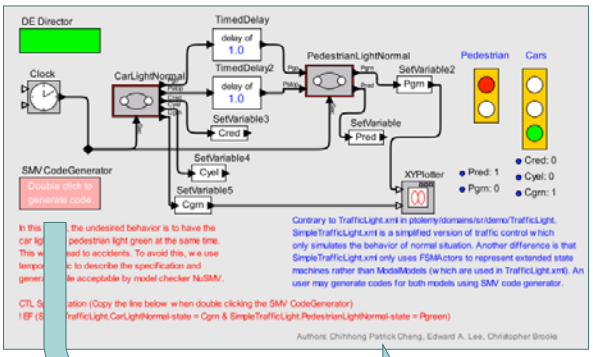


```
MODULE CarLightNormal( Sec_isPresent )
   VAR
      state : {Cyel,Credyel,Cred,Cinit,Cgrn};
      count : { 1s,0,1,2,gt };
   ASSIGN
      init(state) := Cinit;
      next(state) :=
         case
            state=Cinit & count=1s :{ Cred };
            ...
            Sec_isPresent & state=Cred
                          & count=1s :{ Cred };
            ...
            1             : state;
         esac;
      init(count) := 0;
      next(count) :=
         case
            state=Cinit & count=1s :{ 0 };
            ...
            Sec_isPresent & state=Cred & count=1s :{ 1s };
            ...
            1             : count;
         esac;
   DEFINE
      Pstop_isPresent :=  ( Sec_isPresent
                          & state=Cred & count=2 ) ;
      Cred_isPresent :=  ...
      Cgrn_isPresent :=  ...
      Pgo_isPresent :=  ...
      Cyel_isPresent :=  ...
MODULE PedestrianLightNormal( Pstop_isPresent,Pgo_isPresent )
   VAR
      state : {Pinit,Pgreen,Pred};
   ASSIGN
      init(state) := Pinit;
      next(state) :=
         case
            state=Pinit :{ Pred };
            Pgo_isPresent & state=Pred :{ Pgreen };
            Pstop_isPresent & state=Pgreen :{ Pgreen };
            1             : state;
         esac;
   DEFINE
      Pred_isPresent :=  ...
      Pgrn_isPresent :=  ...
MODULE main
   VAR
      CarLightNormal: CarLightNormal( 1);
      PedestrianLightNormal: PedestrianLightNormal(
        CarLightNormal.Pstop_isPresent,
        CarLightNormal.Pgo_isPresent );
   SPEC
      ! EF (CarLightNormal.state = Cgrn
          & PedestrianLightNormal.state = Pgreen)
```

Transformation tool created by Chihong Patrick Cheng

Verification model in SMV

Lee, Berkeley 49

But Model Synthesis is not always possible. Constructing a Deployment Model

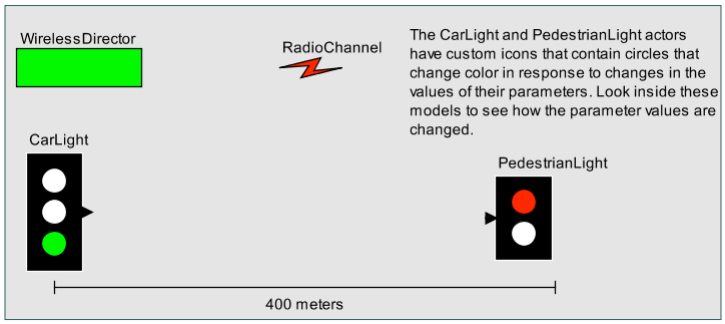

This is the top level of a deployment model, which maps the car light and pedestrian light logic into two distinct compute platforms that communicate via a wireless link. The same models are used for the functional logic, leveraging actor-oriented classes in Ptolemy II.

Lee, Berkeley 50

Inside The Car Light Model

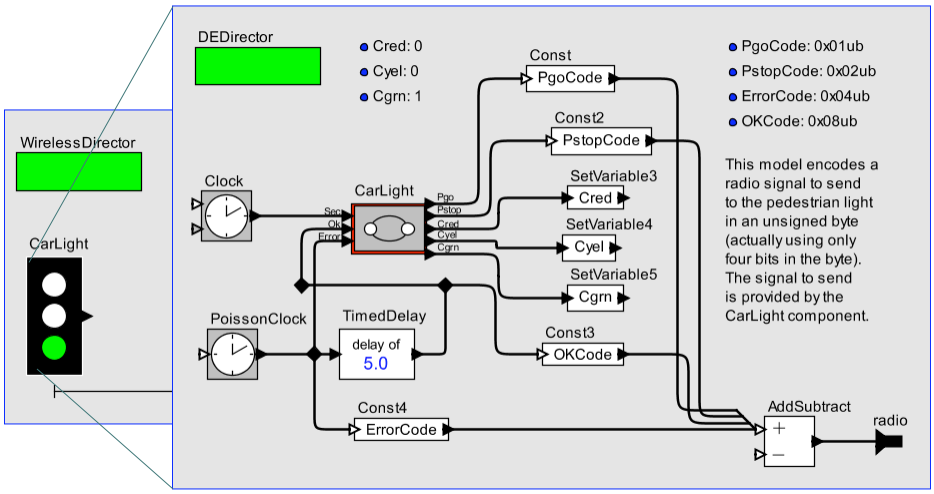

The above model shows the construction of a radio packet for transmission on the wireless link. Inside, it eventually uses the same behavioral model of the traffic light, so changing the behavior in one model is automatically reflected in the other.

Lee, Berkeley 51

Actor-Oriented Classes
[Lee, Liu, Neuendorffer 07]

A class definition (right) has instances in multiple models. Changes to the class definition automatically propagate to the instances.

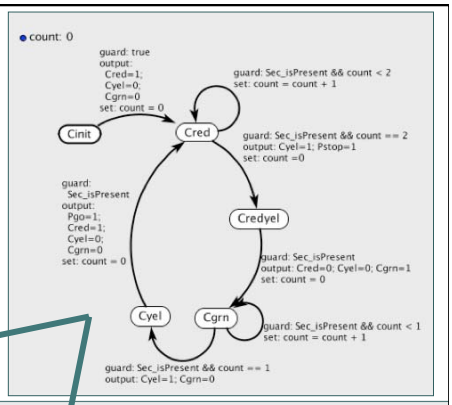

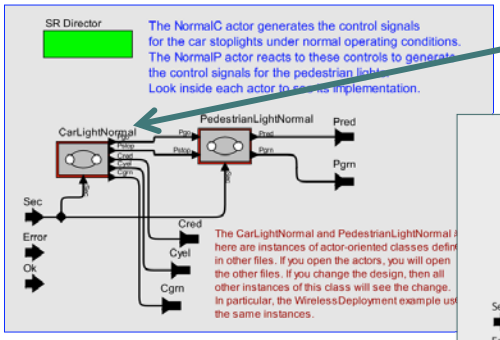

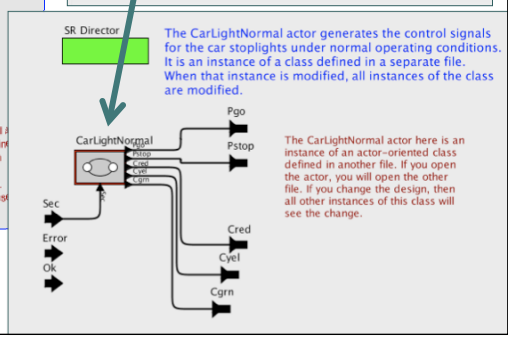

In the functional model above, an instance communicates directly with the pedestrian light. The deployment model (right) constructs a radio packet and models wireless communication.

Multimodeling

Simultaneous use of multiple modeling techniques.

- **hierarchical multimodeling:** hierarchical compositions of distinct modeling styles, combined to take advantage of the unique capabilities and expressiveness of each style.
- **multi-view modeling:** distinct and separate models of the same system are constructed to model different aspects of the system.
- **meta modeling:** use of models together with models of the modeling language.

Metamodel of Ptolemy II Abstract Syntax

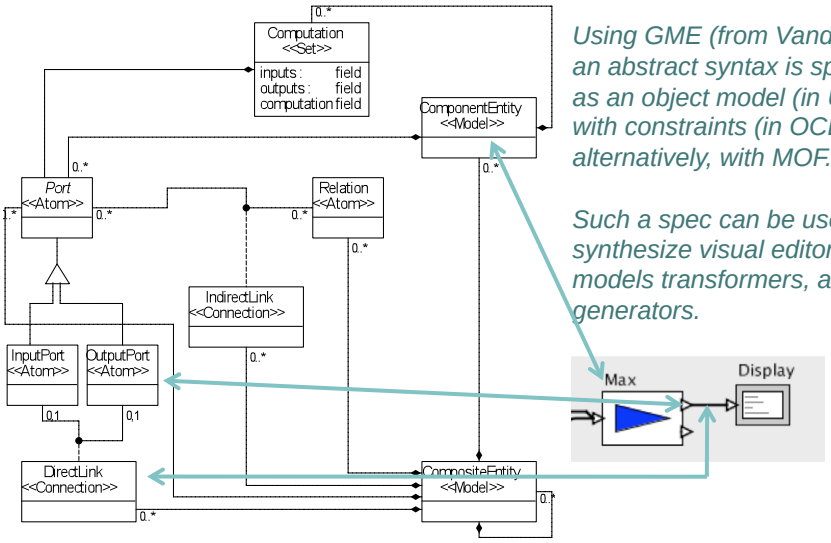

Using GME (from Vanderbilt) an abstract syntax is specified as an object model (in UML) with constraints (in OCL), or alternatively, with MOF.

Such a spec can be used to synthesize visual editors, models transformers, and code generators.

Meta-model of Ptolemy II abstract syntax, constructed in GME by H. Y. Zheng.

Summary: Model Engineering the Berkeley View

- Model transformation
  - Scaling to large models
  - Model optimization
  - Maintenance of product families
  - Workflow automation
  - Design refactoring
  - Enhances usability of visual syntaxes
- Model ontologies
  - Systematic management of model properties
- Multimodeling
  - Hierarchical multimodeling
  - Multi-view modeling
  - Metamodeling