EECS 144 & 244, Fall 2011 **Lee, Roychowdhury, Seshia**

HW 2: Retiming

Assigned: September 14, 2011 *Due: September 26, 2011*

1. (20 points)

   Consider the circuit shown below, with circles representing components and rectangles representing registers. Delays associated with circuit components are shown in the table below.

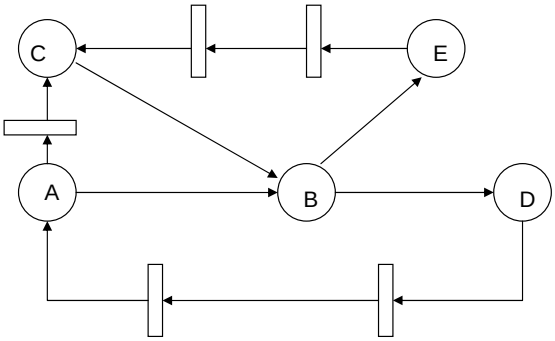

Component	A	B	C	D	E
Delay	22	10	18	13	12

For the following questions, you may do the calculations by hand, or you may write a program to automate the calculations.

(a) (6 points) Draw the retiming graph abstraction for the circuit shown above and compute the W and D matrices.

(b) (4 points) Before retiming, what is the minimum clock period at which this circuit can be run?

(c) (10 points) Is there a retiming that will allow this circuit to run with a clock period of 23? If so, find the retiming. If not, explain why there is no retiming.

Show all steps in your work, including deriving all "legal retiming" constraints and constraints on paths of length greater than 23, and drawing the resulting constraint graph. If a retiming exists, draw the retimed circuit and write down the $r(v)$ values for each component v.