Fundamental Algorithms for System Modeling, Analysis, and Optimization

Edward A. Lee, Jaijeet Roychowdhury, Sanjit A. Seshia
UC Berkeley
EECS 144/244
Fall 2011

Lec 11: Boolean Algebra and Logic Optimization- 2

Thanks to S. Devadas, K. Keutzer, S. Malik, R. Rutenbar for several slides

Multi-level Logic Optimization: Outline

Overview of Multi-level Optimization: An Example

Core Concepts:
- Boolean Function Decomposition
- Boolean and Algebraic Division
- Identifying Divisors

Representation: Boolean Network

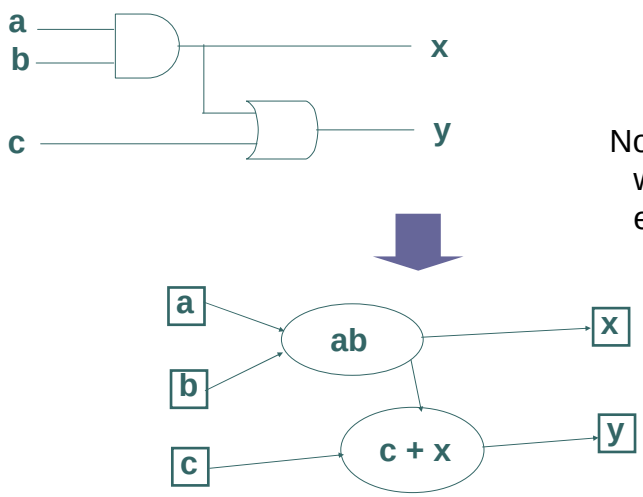

Nodes labeled with SOP expressions

Boolean Network, Explained

It's a graph:

- Primary inputs (variables)
- Primary outputs
- Intermediate nodes (in SOP form in terms of its inputs)

- Quality of network: area, delay, …
  - measured in terms of #(literals), depth, …

Tech.-Independent Multi-Level Optimization: Operations on Boolean Network

Involves performing the following operations "iteratively" until "good enough" result is obtained:

1. Simplification
   Minimizing two-level logic function (SOP for a single node)
2. Elimination
   Substituting one expression into another.
3. Decomposition
   Expressing a single SOP with 2 or more simpler forms
4. Extraction
   Finding & pulling out subexpressions common to many nodes
5. Substitution
   Like extraction, but nodes in the network are re-used

Example

(due to G. De Micheli)

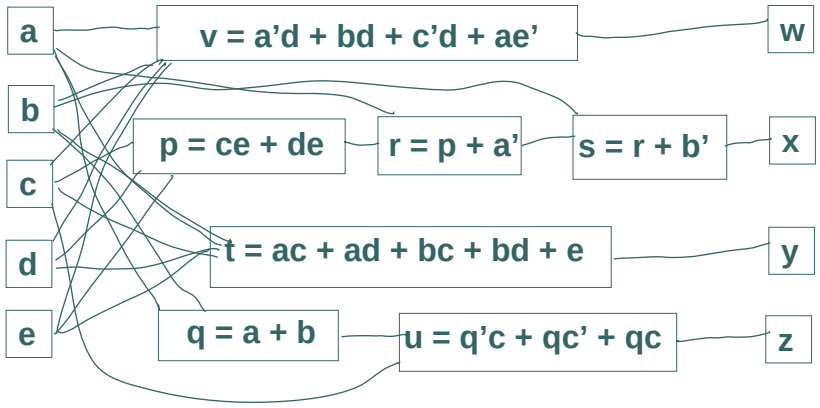

#literals = 33, depth = 3

Example: Elimination

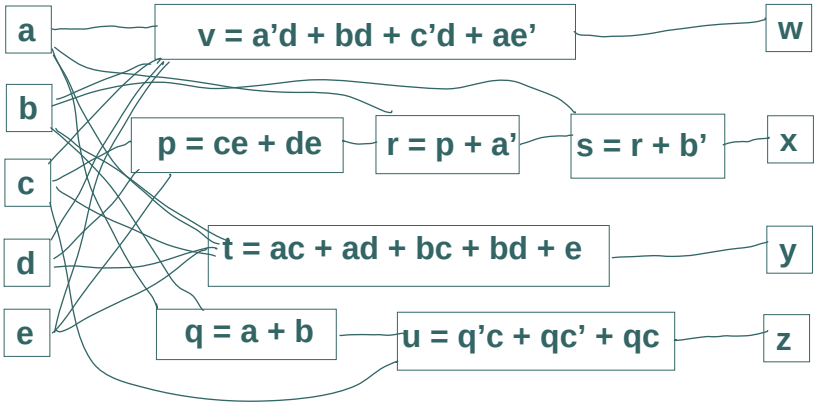

#literals = 33, depth = 3

Example: Eliminate node r

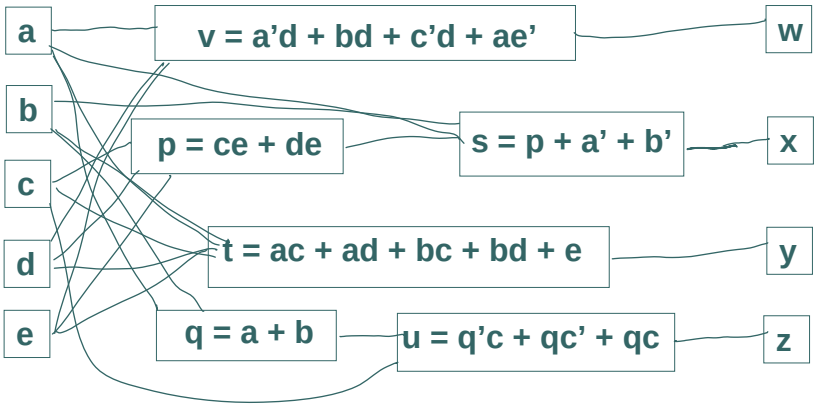

#literals = 32, depth = 2

Example: Simplification

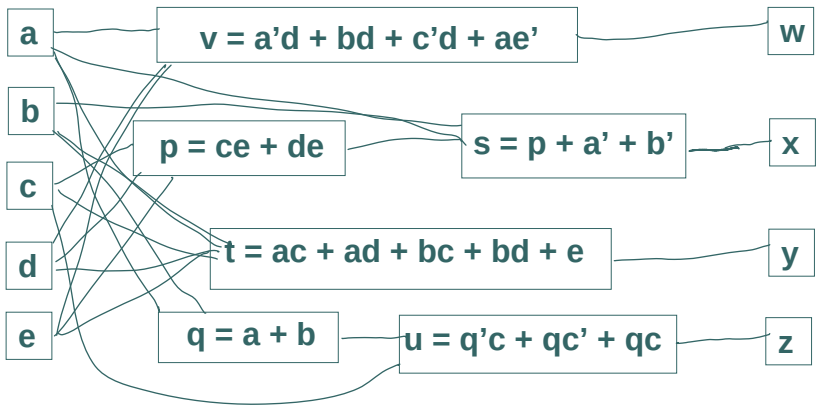

#literals = 32, depth = 2

Example: Simplifying node u

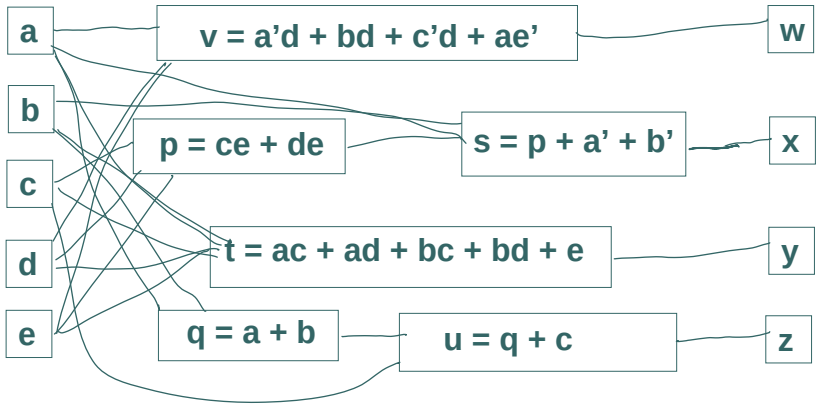

#literals = 28, depth = 2

Example: Decomposition

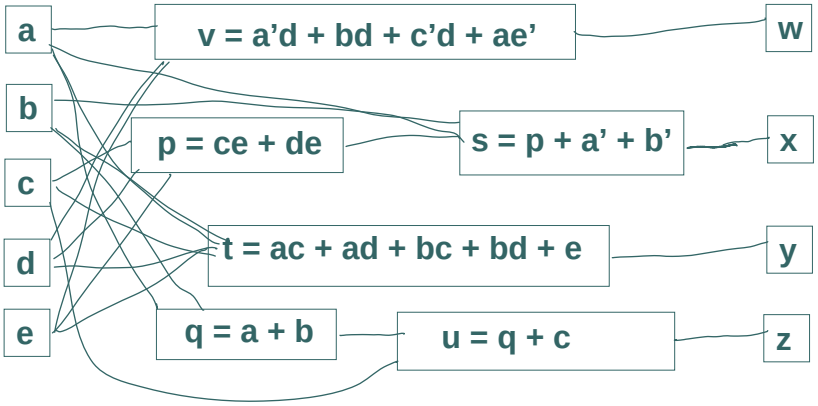

#literals = 28, depth = 2

Example: Decomposing node v

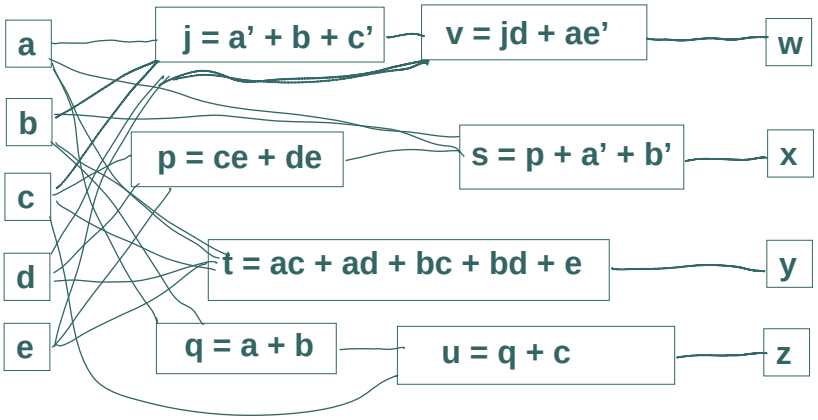

#literals = 27, depth = 2

Example: Extraction

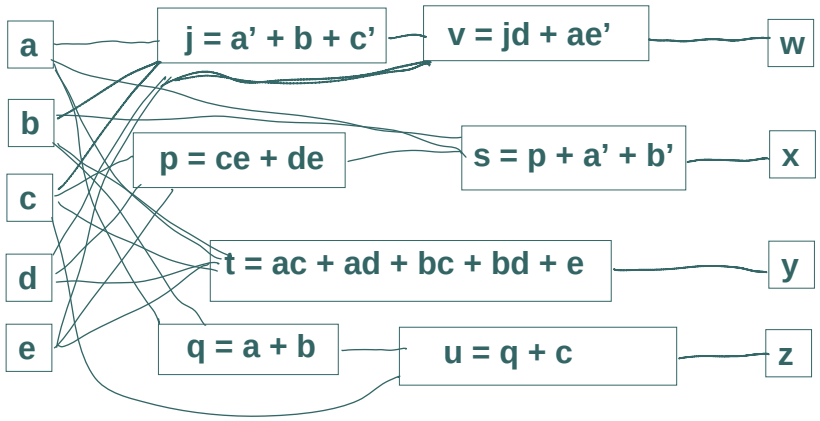

#literals = 27, depth = 2

Example: Extracting from p and t

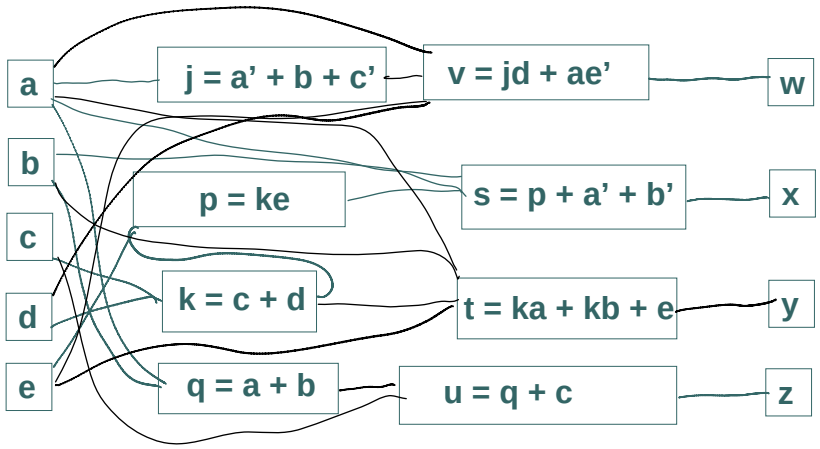

#literals = 23, depth = 3

Example: What next? Can we improve further?

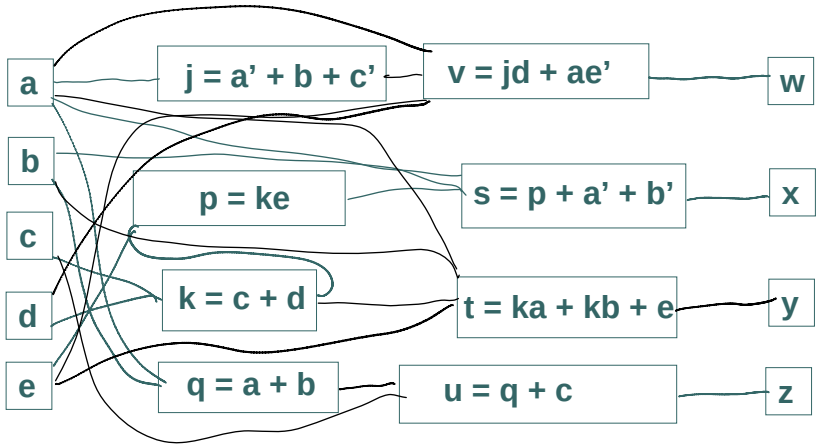

#literals = 23, depth = 3

Which Operations Do We Know How to Do?

1. Simplification
   Minimizing two-level logic function (SOP for a single node)
2. Elimination
   Substituting one expression into another.
3. Decomposition
   Expressing a single SOP with 2 or more simpler forms
4. Extraction
   Finding & pulling out subexpressions common to many nodes
5. Substitution
   Like extraction, but nodes in the network are re-used

Decomposition by Factoring/Division

Starting with a SOP Form

$f = ac + ad + bc + bd + ae'$

We want to generate an equivalent Factored form

$f = (a + b)(c + d) + ae'$

Reason: Factored forms are 'natural' multi-level representations – tree-like expressions

To do factoring, we need to

- Identify divisors
- Perform division

Divisors and Decomposition

Given Boolean function F, we want to write it as

F = D . Q + R

where D – Divisor, Q – Quotient, R – Remainder

Decomposition: Searching for divisors which are common to many functions in the network

- identify divisors which are common to several functions
- introduce common divisor as a new node
- re-express existing nodes using the new divisor

Topics

What is division?

- Boolean vs. Algebraic

How to perform division

How to identify divisors

Boolean Division

Given Boolean function F, we want to write it as

$$F = D \,.\, Q + R$$

Definition:
D is a Boolean divisor of F if Q and R exist such that $F = DQ + R$, $DQ \neq 0$. ($F \neq$ **0)**

D is said to be a factor of F if, D is a divisor of F and in addition, $R = 0$; i.e., $F = DQ$.

Boolean Division: Key Results

- D is a factor of F iff F . D' = 0
  - ON-SET(D) contains ON-SET(F)
- F. D != 0 iff D is a divisor of F
- How many possible factors D can there be for a given F?

Boolean Division: Proof Ideas

D is a factor of F iff F . D' = 0

- (only if part): F = DQ, so F.D' = 0
- (if part): Given that F.D' = 0, F $\subseteq$ D, so F = DF, or F =D(F+X) where X.D = 0.

  Thus, F = DH for some H.

F. D != 0 iff D is a divisor of F

- (if): F = DQ + R, FD = DQ + DR, since DQ != 0, FD != 0
- (only if): FD != 0 and F = FD + FD', take Q=F+d, R=FD', where dD = 0.

How many possible factors D can there be for a given F?

- Doubly exponential in number of variables

Algebraic Model

Idea: Perform division using only the rules (axioms) of real numbers, not all of Boolean algebra

Real Numbers

a.b = b.a

a+b = b+a

a.(b.c) = (a.b).c

a+(b+c) = (a+b)+c

a.(b+c) = a.b + a.c

a.1 = a a.0 = 0 a+0 = a

Boolean Algebra

a.b = b.a

a+b = b+a

a.(b.c) = (a.b).c

a+(b+c) = (a+b)+c

a.(b+c) = a.b + a.c

a.1 = a a.0 = 0 a+0 = a

a+(b.c) = (a+b). (a+c)

a+a' = 1 a.a' = 0 a.a = a

a+a=a

a+1 = 1 a+ab = a a.(a+b) = a

…

Algebraic Division

- A literal and its complement are treated as unrelated

  Each literal as a fresh variable

  E.g.

  f = ab + a'x + b'y as f = ab + dx + ey

- Treat SOP expression as a polynomial

  Division/factoring then becomes polynomial division/factoring

- Boolean identities are ignored
  - Except in pre-processing
  - Simple local simplifications like a + ab → a performed

Algebraic vs. Boolean factorization

$$f = a\bar{b} + a\bar{c} + b\bar{a} + b\bar{c} + c\bar{a} + c\bar{b}$$

Algebraic factorization produces

$$f = a(\bar{b} + \bar{c}) + \bar{a}(b + c) + b\bar{c} + c\bar{b}$$

Boolean factorization produces

$$f = (a + b + c)(\bar{a} + \bar{b} + \bar{c})$$

Algebraic Division Example

F = ac + ad + bc + bd + ae

Want to get Q, R, where F = D Q + R for

1. D = a + b
2. D = a

Algebraic Division Algorithm

What we want:

Given F, D, find Q, R

F, D expressed as sets of cubes (same for Q, R)

Approach:

```
For each cube C in D {
    let B = {cubes in F contained in C}
    if (B is empty) return Q = { }, R = F
    let B = {cubes in B with variables in C removed}
    if (C is the first cube in D we're looking at)
      let Q = B;
    else Q = Q ∩ B;
  }
  R = F \ (Q x D);
```

Complexity?

Taking Stock

- What we know:
  - How to perform Algebraic division given a divisor D
- What we don't
  - How to find a divisor D?
- Recall what we wanted to do:

  Given 2 functions F and G, find a common divisor D and factorize them as

  $$F = D\,Q1 + R1$$
  $$G = D\,Q2 + R2$$

New Terminology: Kernels

A kernel of a Boolean expression F is a cube-free expression that results when you divide F by a single cube

- That "single cube" is called a co-kernel

Cube-free expression: Cannot factor out a single cube that leaves behind no remainder

Examples: Which are cube-free?

- F1 = a + b
- F2 = abc + abd

Kernels: Examples

F = ae + be + cde + ab

K(f)

Kernel	Co-kernel
{a,b,cd}	e
{e,b}	?
?	b
{ae,be,cde,ab}	?

Note: can view kernels as sets of cubes

Why are Kernels Useful?

Multi-level logic optimizer wants to find common divisors of two (or more) functions f and g

Theorem: [Brayton & McMullen]

f and g have a non-trivial (multiple-cube) common divisor d if and only if there exist kernels $k_f \in K(f)$, $k_g \in K(g)$ such that $k_f \cap k_g$ is non-trivial, i.e., not a cube

(here set intersection is applied to the sets of cubes in k_f and k_g)

$\therefore$ can use kernels of f and g to locate common divisors

Theorem, Sketched Informally

F = D1 . K1 + R1
G = D2 . K2 + R2

K1 = (X + Y + …) + stuff1
K2 = (X + Y + …) + stuff2

Then,

- F = (X + Y + …) D1 + stuff3
- G = (X + Y + …) D2 + stuff4

So, if we find kernels and intersect them, the intersection gives us our common divisor

Kernel Intersection: Example

F = ae + be + cde + ab

G = ad + ae + bd + be + bc

K(f)

Kernel	Co-kernel
{a,b,cd}	e
{e,b}	a
{e,a}	b
{ae,be,cde,ab}	1

K(g)

Kernel	Co-kernel
{a,b}	d or e
{d,e}	a or b
{d,e,c}	b
{ad,ae,bd,be,bc}	1

How do we find Kernels?

Overview: Given a function F

1. Pick a variable x appearing in F, and use it as a divisor
2. Find the corresponding kernel K if one exists (at least 2 cubes in F contain x)
   - If not, go back to (1) and pick another variable
3. Use K in place of F and recurse to find kernels of K
   - F = x K + R and K = y M + S ➔ F = xy M + …
   - Add kernels of K to those of F
4. Go back to (1) and pick another variable to keep finding kernels

Finding Kernels: Example

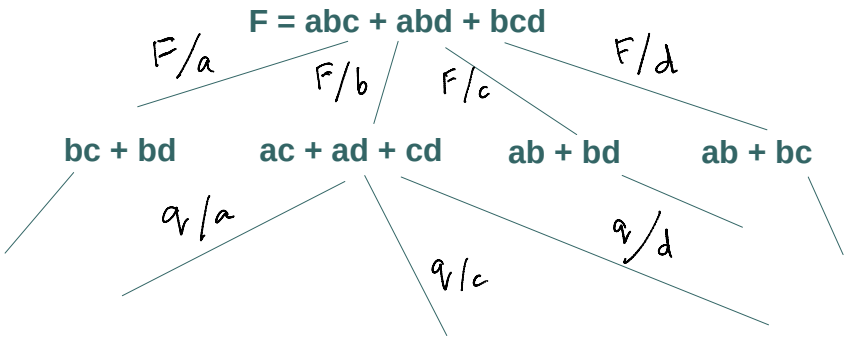

Finding Kernels: Example

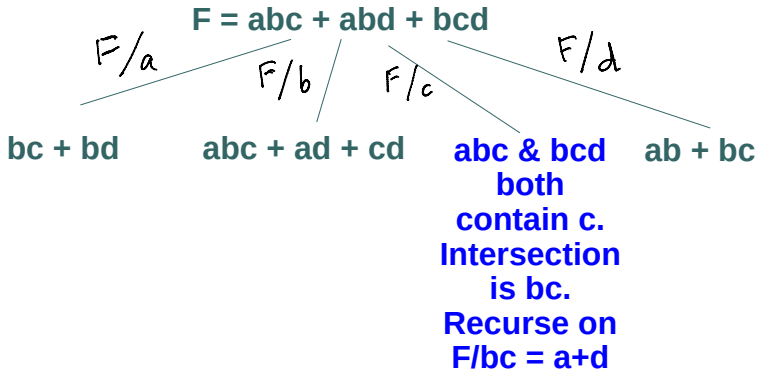

Take intersection of all cubes containing a variable

Kernel Finding Algorithm

```
FindKernels(F) {
  K = { };
  for (each variable x in F) {
    if (F has at least 2 cubes containing x) {
      let S = {cubes in F containing x};
      let c = cube resulting from intersection of all cubes in S
      K = K ∪ FindKernels(F/c);  //recursion
    }
  }
  K = K ∪ F ;
  return K;
}
```


Strong (or Boolean) Division

[optional reading]

Given a function f to be strong divided by g

- Add an extra input to f corresponding to g, namely G and obtain function h as follows

$$h_{DC} = G\bar{g} + \bar{G}g$$

Inputs to f that cannot occur

$$h_{ON} = f_{ON} - h_{DC} = f_{ON} \cdot \overline{h_{DC}}$$

$$h_{OFF} = \overline{f_{ON} + h_{DC}}$$

Get: h = Q G + R

Minimize h using two-level minimizer

Reading

R. Brayton, G. Hachtel, A. Sangiovanni-Vincentelli, ‘Multilevel Logic Synthesis’, Proceedings of the IEEE, Feb’90.